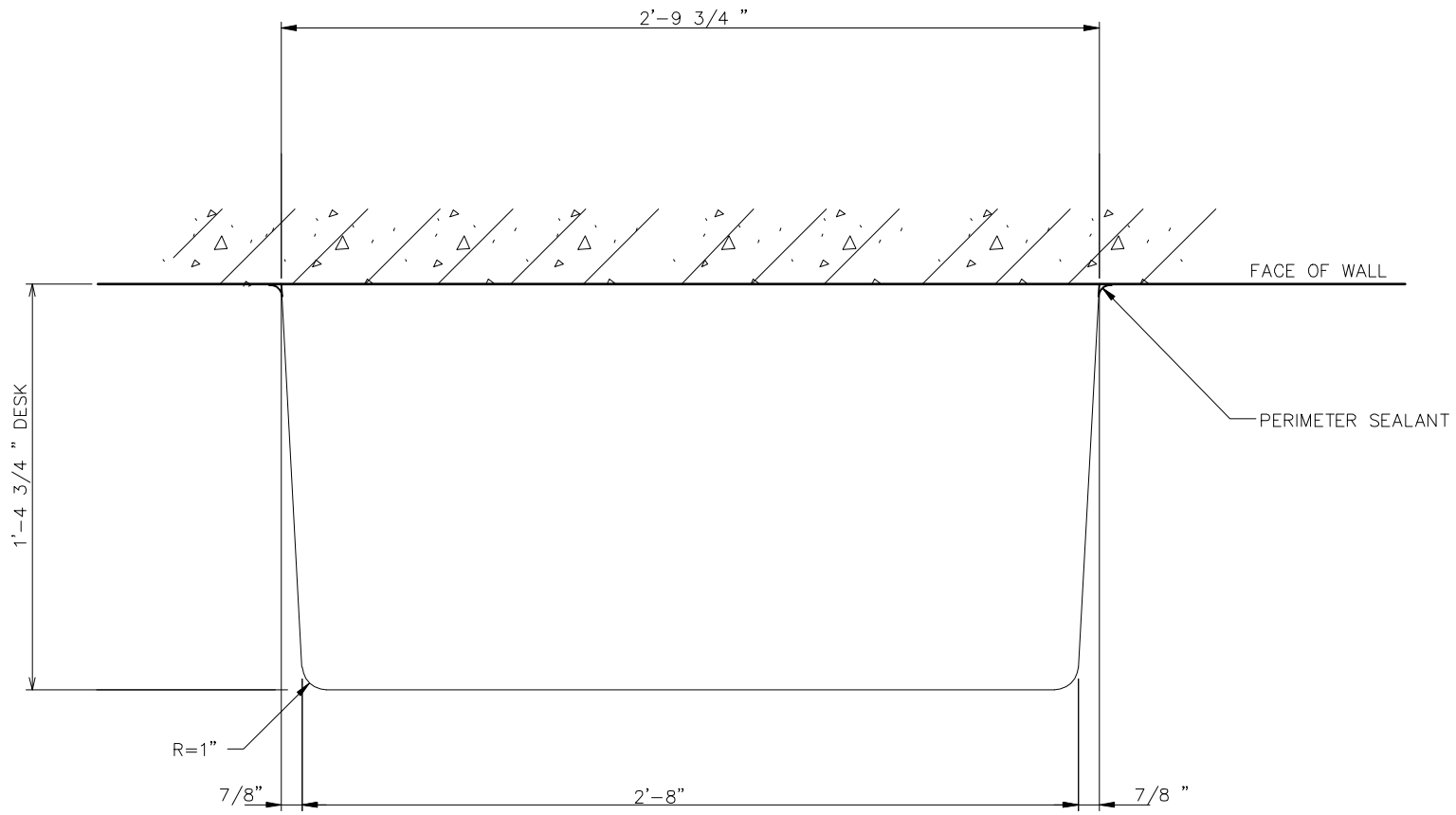

PLAN

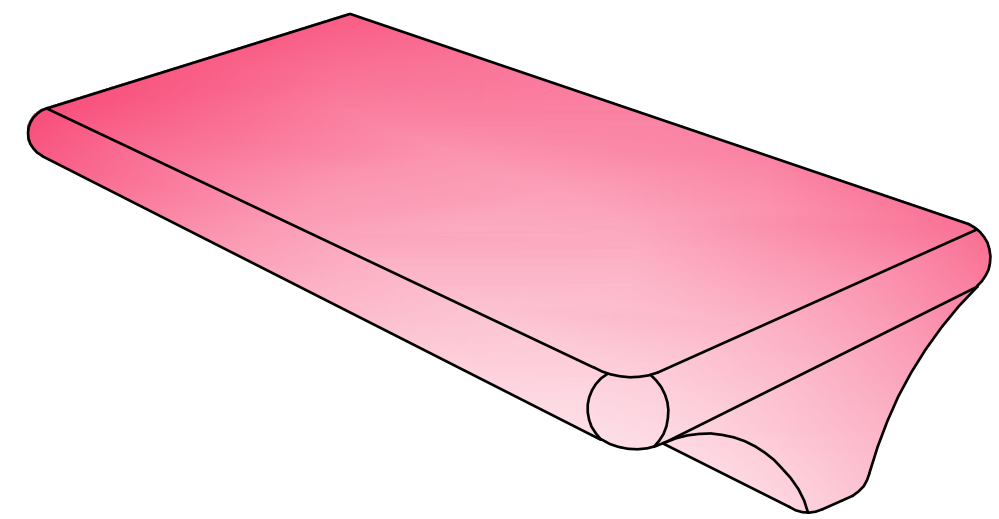

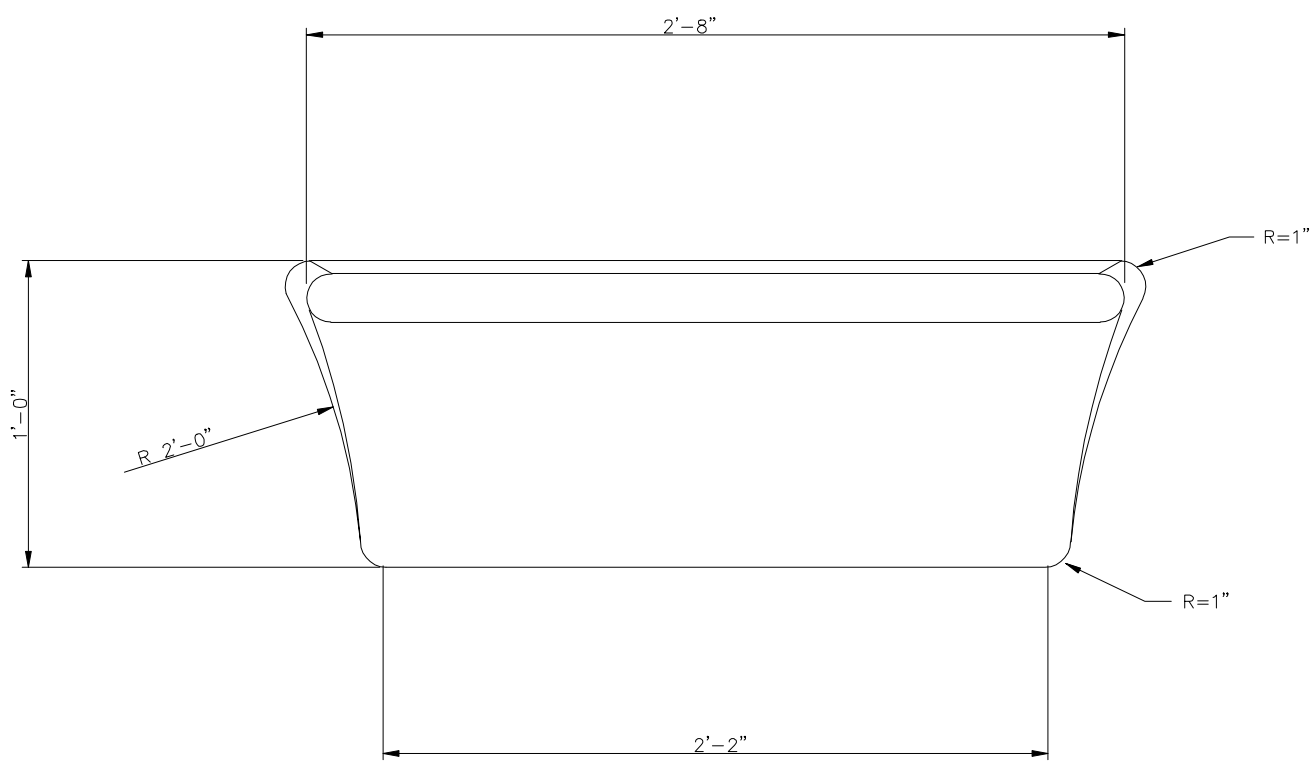

FRONT ELEVATION

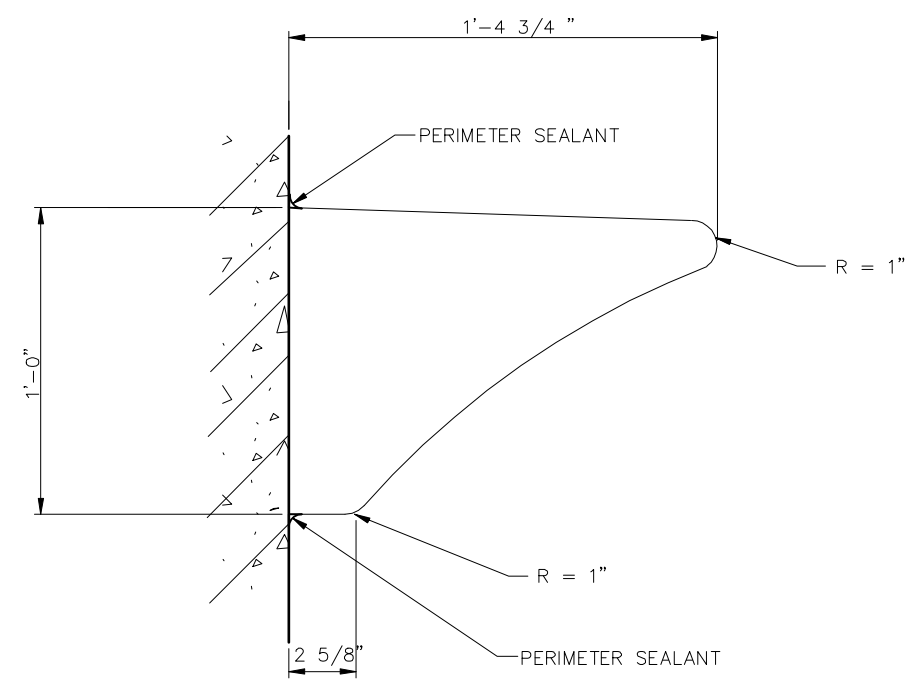

SIDE ELEVATION

MAX SECURE™
Detention Products

© 2008 MAX SECURE SYSTEM INC.
CONFIDENTIAL AND PROPRIETARY DOCUMENT
ANY ONE OR MORE OF THE FOLLOWING
PATENTS MAY APPLY
U.S PATENT NO. 5,303,669 5,775,835
6,449,790 AND 6,895,622 B2
C.D.N. PATENT NO. 2,032,532 2,070,984
US PATENTS PENDING.
© KENNETH E. SZEKELY

MATERIAL LIST

ITEM	DESCRIPTION	PART NO.	QT'Y
1			
2			
3			
4			
5			

REFERENCE DRAWINGS

DWG. NO.	DESCRIPTION

No.	DATE	REVISION	APPR.

SCALE N.T.S — 0 3 6 9 12 15 / 5

DESIGNED BY	K.S.	DATE	09/10/91
DRAWN BY	A.M	DATE	08/24/07
CHECKED BY	J.D	DATE	08/24/07
PROJECT MANAGER			
TRADE		PART NO.	5000-9

MATERIAL: HERCULITE POLYMER COMPOSITE

SUBJECT: **MAX SECURE™** MAINTENANCE FREE INSTITUTIONAL FURNITURE

PROJECT

WALL MOUNTED
DESK
PART NO. 5000-9
PLAN AND ELEVATION

DRAWING NO.	SHT. NO.	REV. NO.
5000-9	01	0