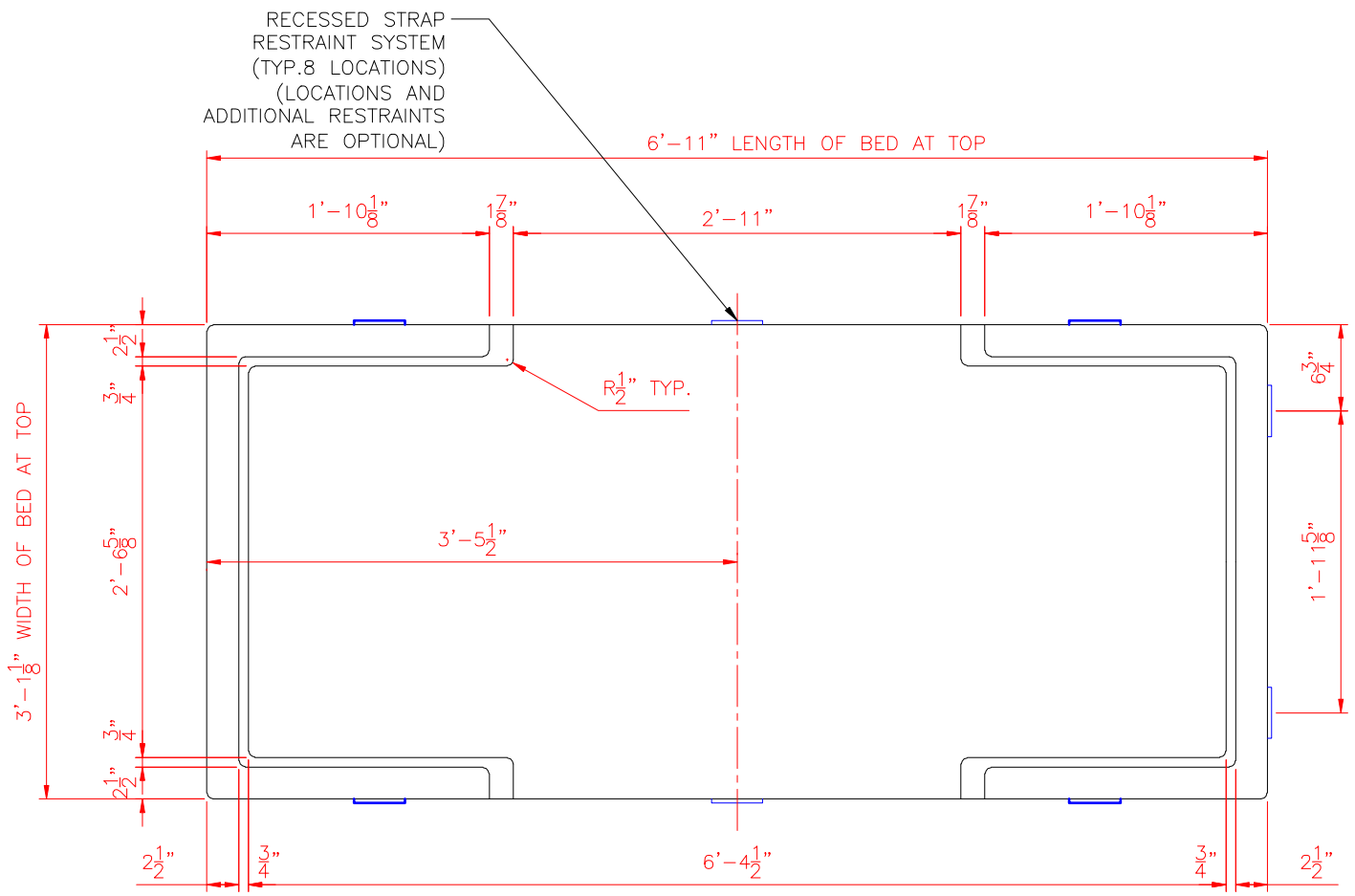

TOP VIEW

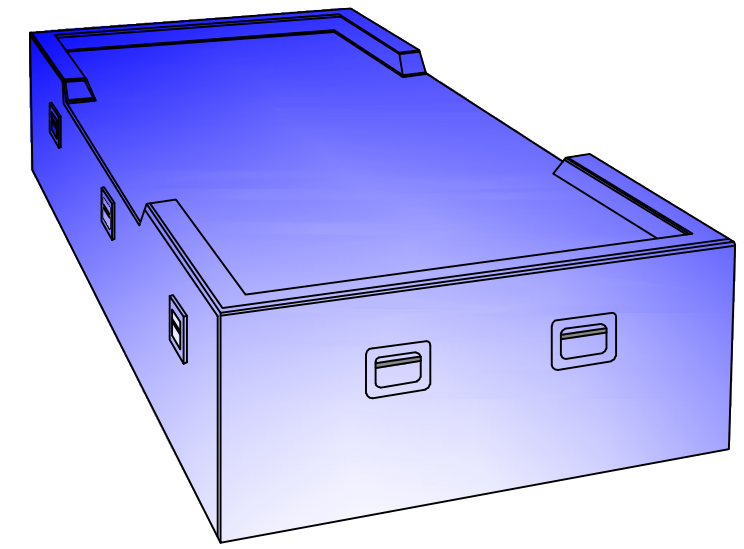

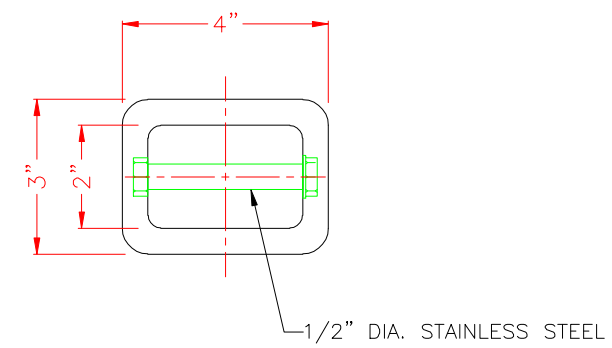

RECESSED STRAP RESTRAINT DETAIL

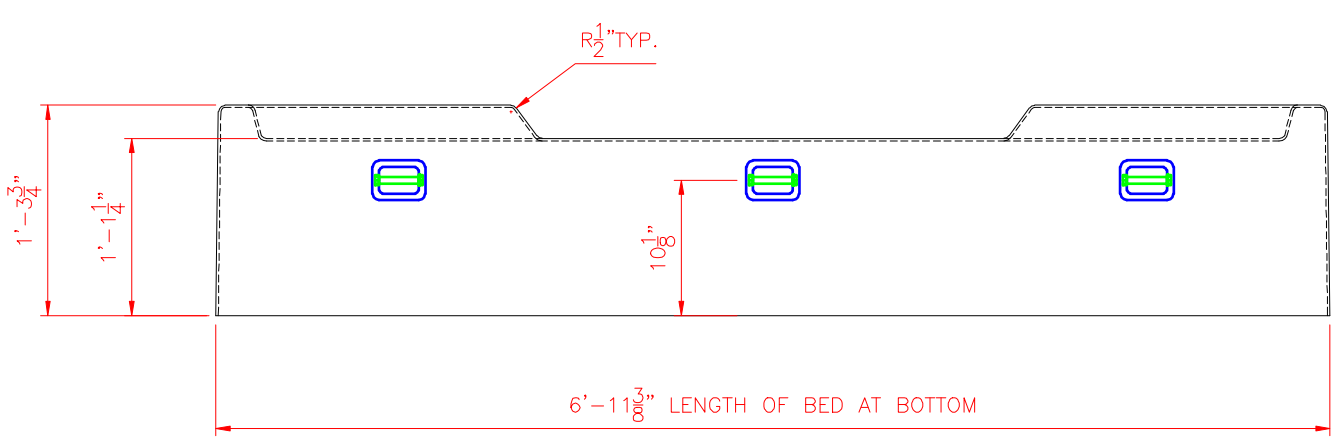

FRONT ELEVATION

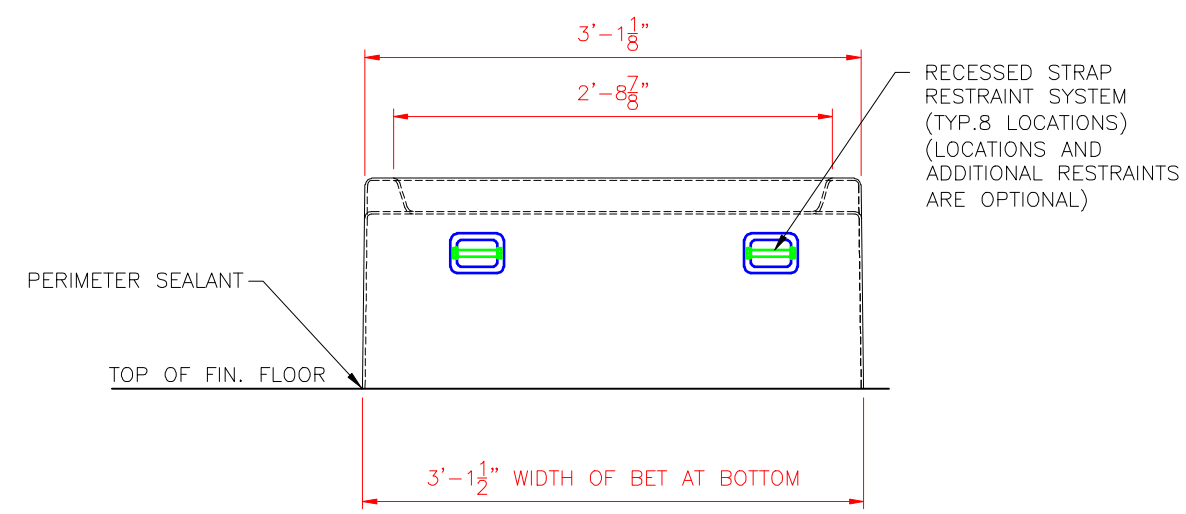

SIDE ELEVATION

NOTE:
RESTRAINTS ARE OPTIONAL

MAX SECURE™
Detention Products

© 2008 MAX SECURE SYSTEM INC.
CONFIDENTIAL AND PROPRIETARY DOCUMENT
ANY ONE OR MORE OF THE FOLLOWING
PATENTS MAY APPLY
U.S PATENT NO. 5,303,669 5,775,835
6,449,790 AND 6,895,622 B2
C.D.N. PATENT NO. 2,032,532 2,070,984
US PATENTS PENDING.
© KENNETH E. SZEKELY

MATERIAL LIST

ITEM	DESCRIPTION	PART NO.	QT'Y
1			
2			
3			
4			
5			

REFERENCE DRAWINGS

DWG. NO.	DESCRIPTION

No.	DATE	REVISION	APPR.

SCALE N.T.S. 0 3 6 9 12 15

DESIGNED BY	K.S.	DATE	09/10/91
DRAWN BY	A.M.	DATE	08/21/07
CHECKED BY	J.D.	DATE	08/21/07
PROJECT MANAGER			
TRADE		PART NO.	5000-12R
MATERIAL	HERCULITE POLYMER COMPOSITE		

SUBJECT
MAX SECURE™
MAINTENANCE FREE
INSTITUTIONAL FURNITURE

PROJECT
FREE STANDING BED
PART NO. 5000-12R
PLAN AND ELEVATIONS

DRAWING NO.	SHT. NO.	REV. NO.
5000-12R	01	0